液压无级变速装置/ HPVMF-23-L-01

本产品由主泵部分、马达部分、补油泵及阀组成。工作时，主泵由原动机带动，通过柱塞与油缸体孔容积腔的变化来达到产生液压能。马达由液压泵提供液压能，通过马达油缸体与柱塞的作用驱动主轴旋转，转化为机械能，为执行元件提供扭矩。

本产品具有结构紧凑、体积小、重量轻、效率高、寿命长、噪音低等特点。主要用于联合收割机及小型工程机械的行走驱动系统。

The product consists of main pump, motor, charge pump and valves. During working period, the main pump is driven by the motor, and produces the hydraulic power through by changes of piston and cylinder volume. The motor is provided with hydraulic power by pump, the principle axis is driven to rotate through interaction of the motor cylinder and piston and transformed to mechanical energy to supply torques for the controlling elements.

The product has features of compact structure, small volume, light weight, high efficiency, long service life, low noise level, etc. It is mainly applied to the walking drive system of combined harvester and minitype engineering machine.

技术参数/ Technical data

排量 (ml/rev)Displacement	泵 Pump	(0~23.4) ml/r
	马达 Motor	23.4 ml/r
旋转方向 Rotate Direction	泵 Pump	逆时针（从轴端看） Counter-clockwise (Viewed from shaft end)
	马达 Motor	双向 Bidirectional direction
转速 Rotate Speed	输入 Input	3000r/min
	输出 Output	0~3000 r/min
最高压力 Maximum Pressure	280bar	
额定压力 Rated Pressure	210 bar	
进口压力 Inlet Pressure	不低于0.8 bar No less than 0.8bar	
壳体回油压力 Case Drain Pressure	不大于2.8 bar No more than 2.8bar	
补油泵排量 Charge Pump Displacement	6.1ml/r	
工作介质 Working Medium	Hm68液压油 Hydraulic oil	
工作液过滤精度 Filtration Rate	10μm	
工作油温范围 Oil Temperature	-20℃~80℃	
总效率 Overall Efficiency	不低于74% No less than 74%	

液压原理图

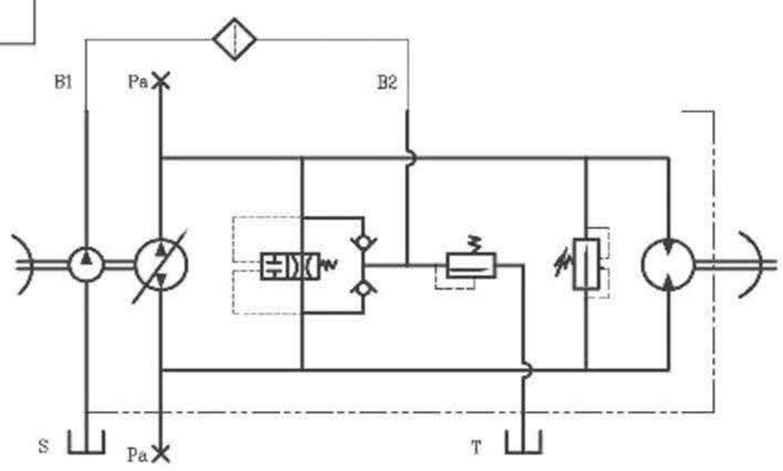

安装图 Mounting Dimension

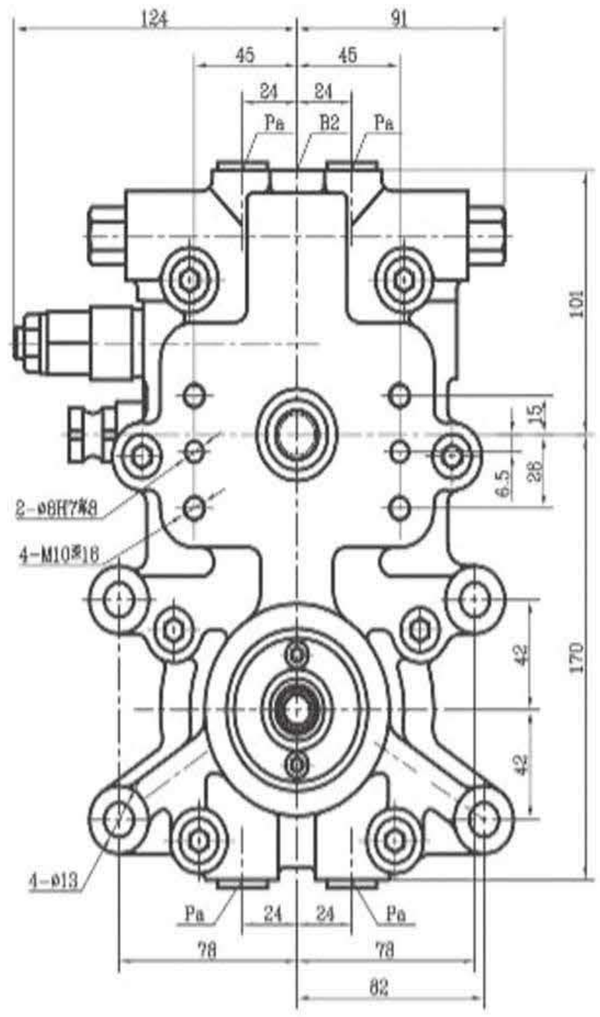

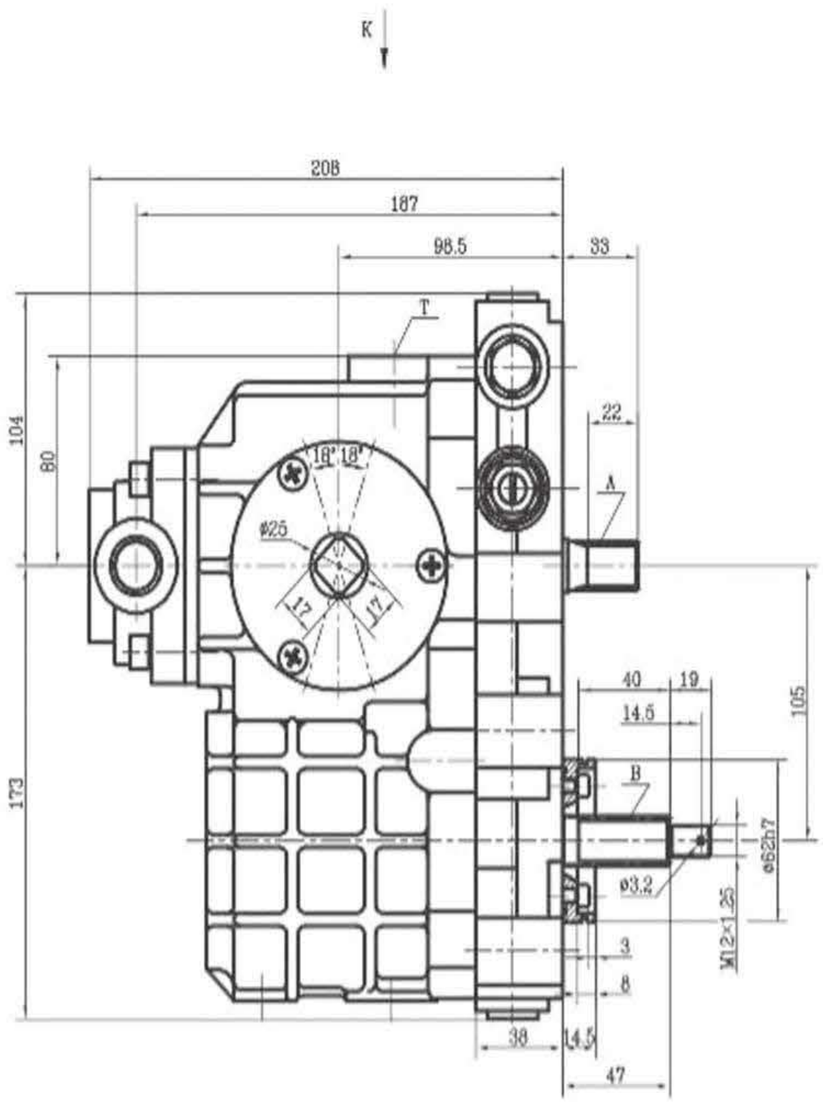

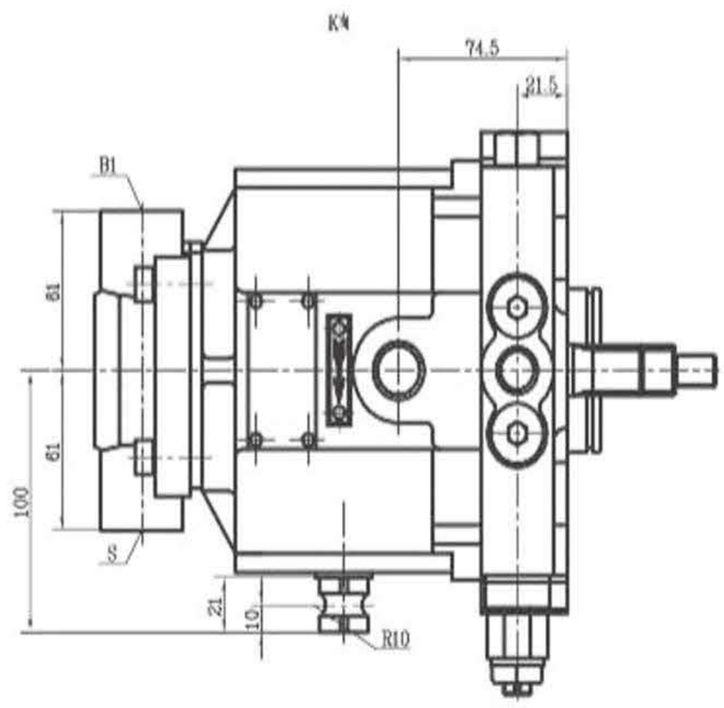

渐开线花键参数：

渐开线花键	A	B
齿数	10	18
模数	1.667	1
压力角	20°	20°
变位系数	+0.8	+0.8
大径	$\phi19.667^{0}_{-0.06}$	$\phi19.8^{0}_{-0.021}$
小径	$\phi16^{0}_{-0.21}$	$\phi17.6^{0}_{-0.21}$

油口形式及尺寸

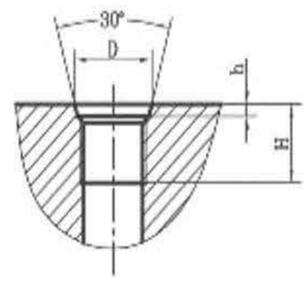

油口 \ 尺寸	D1	$D^{+0.1}_{0}$	$h^{+0.4}_{0}$	H
T,S,B1	G1/2	ø22.6	2.5	20
B2,Pa	G3/8	ø18.6	3	18

HPVMF-28-L-02 液压无级变速装置 The hydraulic static transmission

◆ 本产品由主泵部分、马达部分、补油泵及阀组成。工作时，主泵由原动机带动，通过柱塞与油缸体孔容积腔的变化来达到产生液压能。马达由液压泵提供液压能，通过马达油缸体与柱塞的作用驱动主轴旋转，转化为机械能，为执行元件提供扭矩。

本产品具有结构紧凑、体积小、重量轻、效率高、寿命长、噪音低等特点。主要用于联合收割机及小型工程机械的行走驱动系统。

The product consists of main pump, motor, charge pump and valves. During working period, the main pump is driven by the motor, and produces the hydraulic power through by changes of piston and cylinder volume. The motor is provided with hydraulic power by pump, the principle axis is driven to rotate through interaction of the motor cylinder and piston and transformed to mechanical energy to supply torques for the controlling elements.

The product has features of compact structure, small volume, light weight, high efficiency, long service life,

技术参数/ Technical data

排量 (ml/rev)Displacement	泵 Pump	(0~28) ml/r
	马达 Motor	28 ml/r
旋转方向 Rotate Direction	泵 Pump	逆时针（从轴端看） Counter-clockwise (Viewed from shaft end)
	马达 Motor	双向 Bidirectional direction
转速 Rotate Speed	输入 Input	3000r/min
	输出 Output	0~3000 r/min
最高压力 Maximum Pressure	280bar	
额定压力 Rated Pressure	210 bar	
进口压力 Inlet Pressure	不低于0.8 bar No less than 0.8bar	
壳体回油压力 Case Drain Pressure	不大于2.8 bar No more than 2.8bar	
补油泵排量 Charge Pump Displacement	7ml/r	
工作介质 Working Medium	Hm68液压油 Hydraulic oil	
工作液过滤精度 Filtration Rate	10μm	
工作油温范围 Oil Temperature	-20℃~80℃	
总效率 Overall Efficiency	不低于74% No less than 74%	

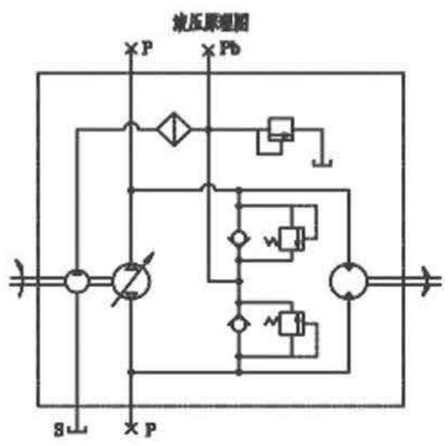

安装图 Mounting Dimension

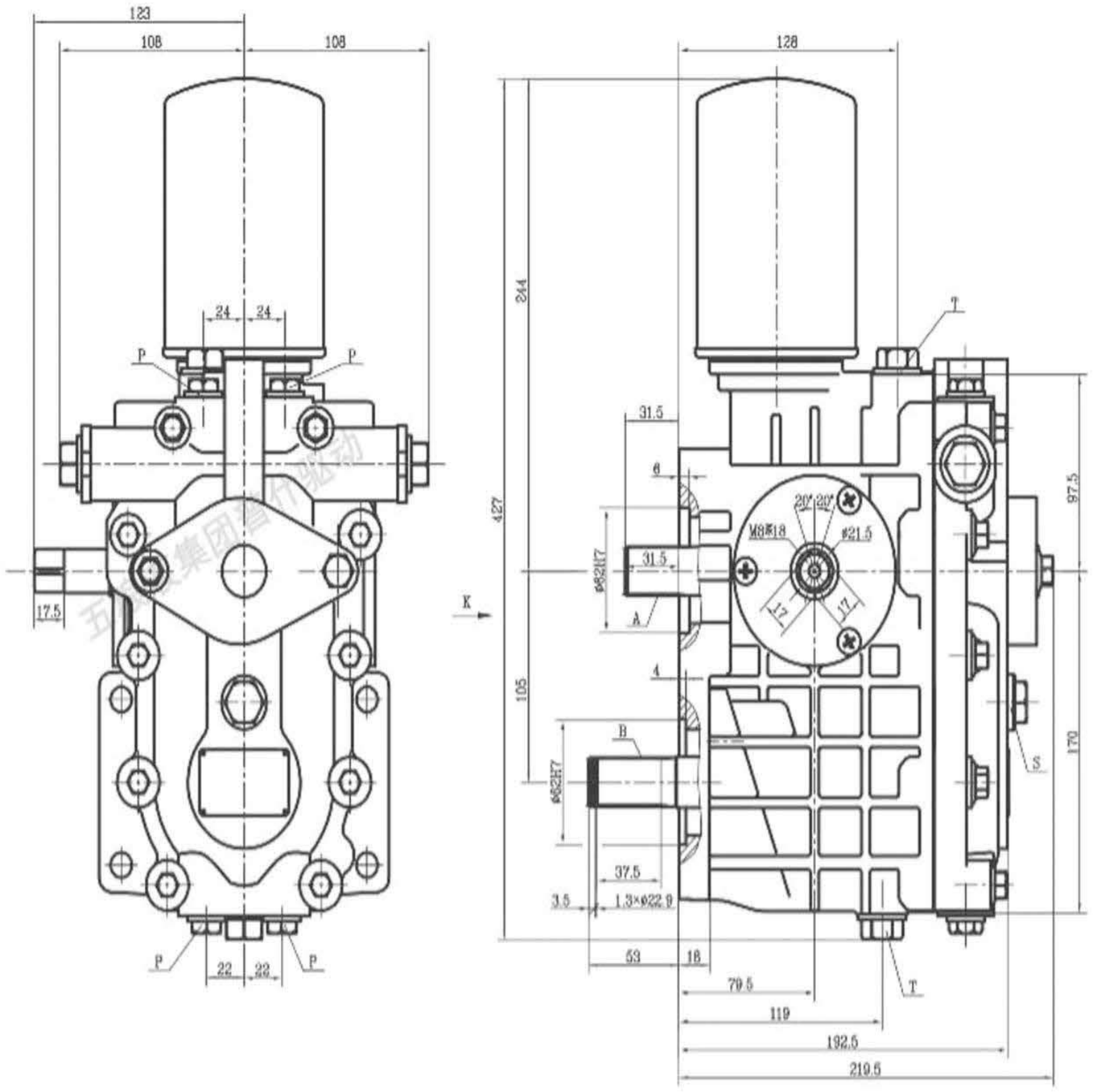

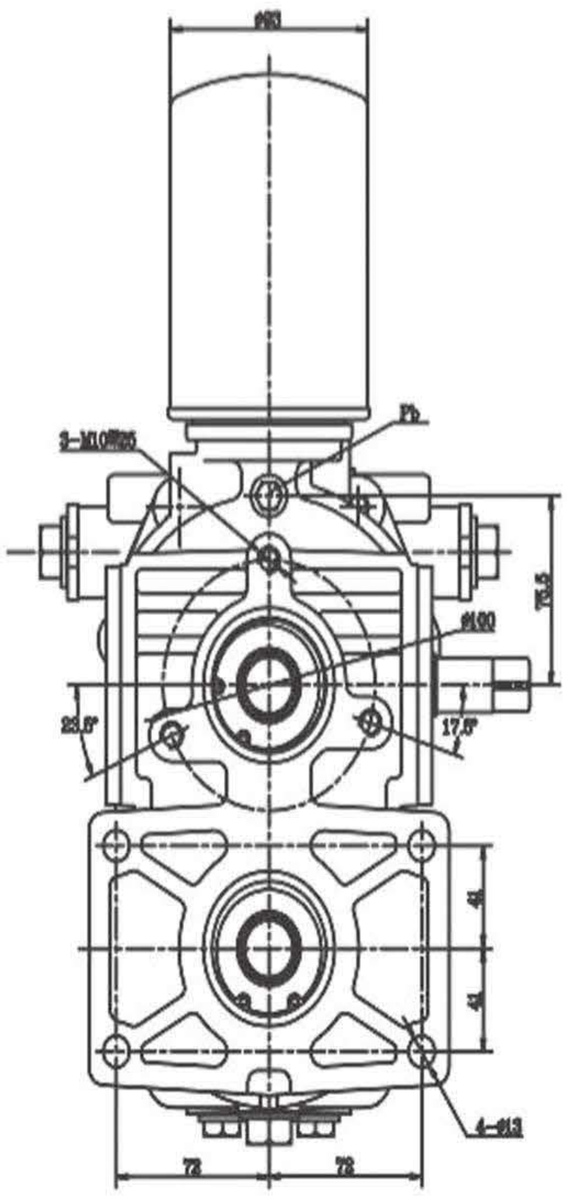

渐开线花键A、B参数	
齿数	18
模数	1.25
压力角	20°
变位系数	+0.8
大径	$\phi24.5^{0}_{-0.05}$
小径	$\phi22^{0}_{-0.21}$

油口形式及尺寸

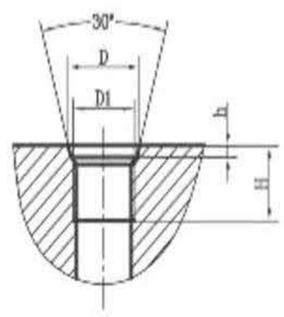

油口 / 尺寸	D1	$D^{+0.1}_{0}$	$h^{+0.4}_{0}$	H
P,Pb	G1/4	ø15.6	2.5	18
T	G1/2	ø22.6	2.5	20
S	3/4-16UNF	ø20.65	2.5	14

HPVMF-37-L-02 液压无级变速装置 The Hydraulic static transmission

◆ 本产品由主泵部分、马达部分、补油泵及阀组成。工作时，主泵由原动机带动，通过柱塞与油缸体孔容积腔的变化来达到产生液压能。马达由液压泵提供液压能，通过马达油缸体与柱塞的作用驱动主轴旋转，转化为机械能，为执行元件提供扭矩。

本产品具有结构紧凑、体积小、重量轻、效率高、寿命长、噪音低等特点。主要用于联合收割机及小型工程机械的行走驱动系统。

The product consists of main pump, motor, charge pump and valves. During working period, the main pump is driven by the motor, and produces the hydraulic power through by changes of piston and cylinder volume. The motor is provided with hydraulic power by pump, the principle axis is driven to rotate through interaction of the motor cylinder and piston and transformed to mechanical energy to supply torques for the controlling elements.

The product has features of compact structure, small volume, light weight, high efficiency, long service life,

技术参数/ Technical data

排量 (ml/rev)Displacement	泵 Pump	(0~37) ml/r
	马达 Motor	37 ml/r
旋转方向 Rotate Direction	泵 Pump	逆时针（从轴端看） Counter-clockwise (Viewed from shaft end)
	马达 Motor	双向 Bidirectional direction
转速 Rotate Speed	输入 Input	3000r/min
	输出 Output	0~3000 r/min
最高压力 Maximum Pressure	280bar	
额定压力 Rated Pressure	210 bar	
进口压力 Inlet Pressure	不低于0.8 bar No less than 0.8bar	
壳体回油压力 Case Drain Pressure	不大于2.8 bar No more than 2.8bar	
补油泵排量 Charge Pump Displacement	7.32ml/r	
工作介质 Working Medium	Hm68液压油 Hydraulic oil	
工作液过滤精度 Filtration Rate	10μm	
工作油温范围 Oil Temperature	-20℃~80℃	
总效率 Overall Efficiency	不低于74% No less than 74%	

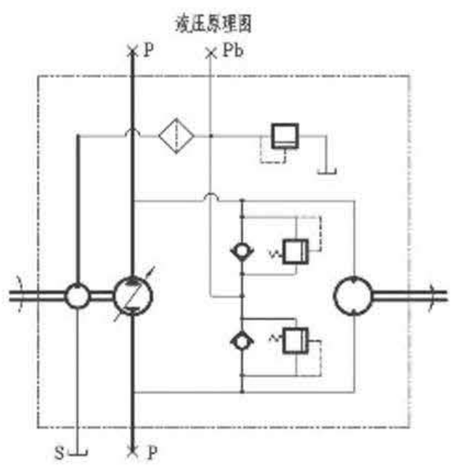

安装图 Mounting Dimension

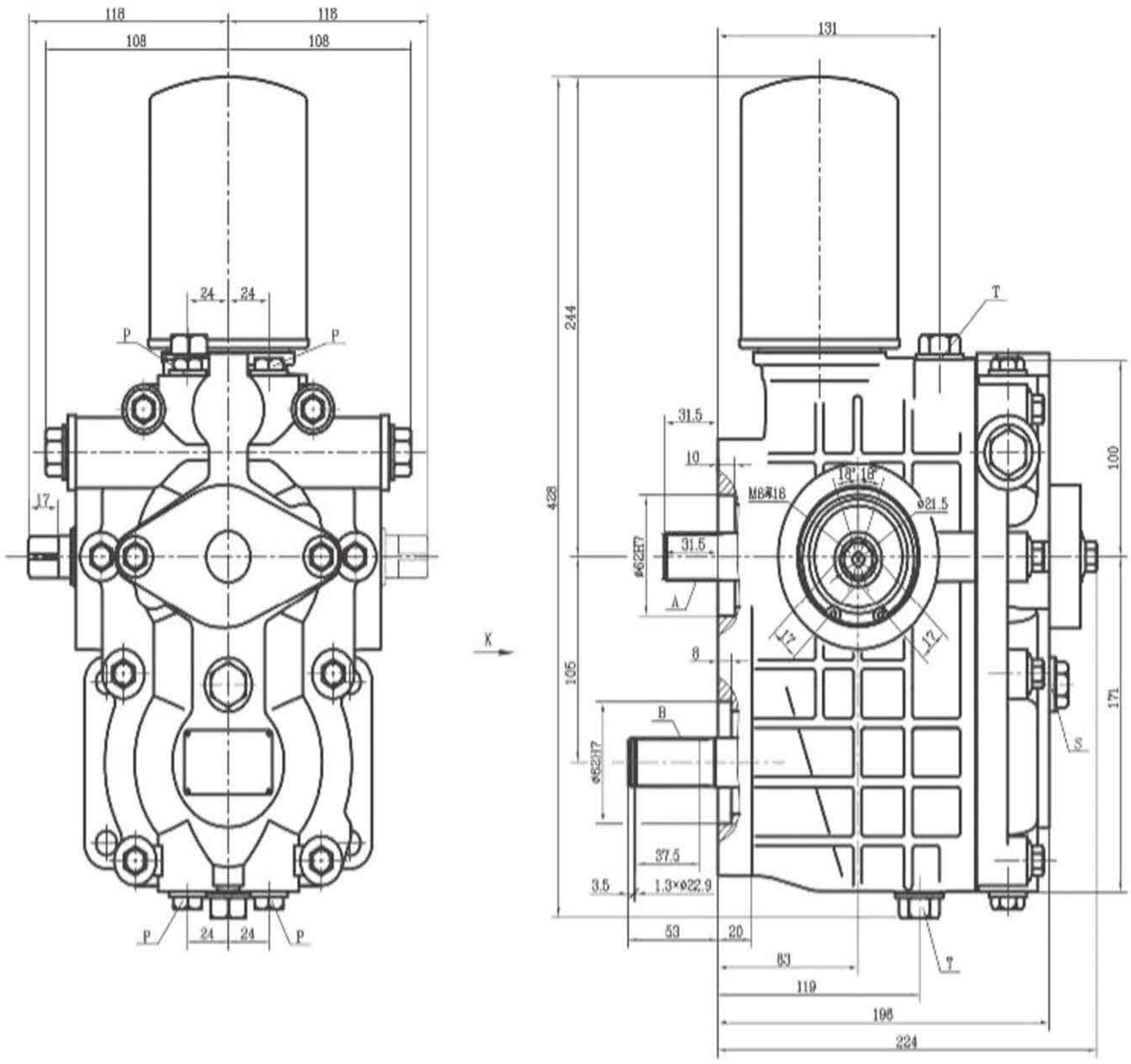

渐开线花键A、B参数	
齿数	18
模数	1.25
压力角	20°
变位系数	+0.8
大径	$\phi 24.5^{0}_{-0.05}$
小径	$\phi 22^{0}_{-0.21}$

油口形式及尺寸

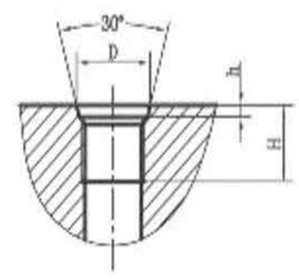

油口 / 尺寸	D1	$D^{+0.1}_{0}$	$h^{+0.4}_{0}$	H
P,Pb	G1/4	ø15.6	2.5	18
T	G1/2	ø22.6	2.5	20
S	3/4-16UNF	ø20.65	2.5	14